# Work Order ID 74221 hH

*Tuesday, September 27, 2011 12:26:01 PM*



**Item ID:** D206-642-151 **Accept** **Setup** **Start**

**Revision ID:** **Stop**

**Item Name:** Replacement Skidtube

**Start Date:** 10/3/2011 **Start Qty:** 1.00 **Cust Item ID:**

**Required Date:** 11/4/2011 **Req'd Qty:** 1.00 **Customer:**

**Reference:**

**Approvals:** **Process Plan:** MF **Date:** 11-09-28 **Tooling:** **Date:** **Run** **Start**

**QC:** **Date:** **SPC (Y/N):** **Date:** **Stop**

| Sequence ID/ Work Center ID | Operation Description | Set Up/ Run Hours | Tool ID | Tool # | Plan Code | Accept Qty | Reject Qty | Reject Number | Insp. Stamp |
|---|---|---|---|---|---|---|---|---|---|
| **Draw Nbr** | **Revision Nbr** | | | | | | | | |
| D3804 | A | | | | | | | | |
| IIN-D206-642 | O | | | | | | | | |
| 100 | DOCUMENT CONTROL | 0.00 | | | | | | | |
| DC | **Memo** | 0.00 | | | | | | | |
| Document Control | Photocopy bluefile & type labels per PPP D206-642-151 | | CHG001 | | | | | | |

N/A

Dart Aerospace Ltd

| W/O: | | WORK ORDER CHANGES | | | | | |
|---|---|---|---|---|---|---|---|
| DATE | STEP | PROCEDURE CHANGE | By | Date | Qty | Approval Chief Eng / Prod Mgr | Approval QC Inspector |
| | | | | | | | |
| | | | | | | | |

**Part No:** _____ **PAR #:** _____ **Fault Category:** _____ **NCR:** Yes No **DQA:** _____ **Date:** _____

**Resolution:** _____ **Disposition:** _____ **QA: N/C Closed:** _____ **Date:** _____

| NCR: | | WORK ORDER NON-CONFORMANCE (NCR) | | | | | | |
|---|---|---|---|---|---|---|---|---|
| DATE | STEP | Description of NC Section A | Corrective Action Section B | | | Verification Section C | Approval Chief Eng | Approval QC Inspector |
| | | | Initial Chief Eng | Action Description Chief Eng | Sign & Date | | | |
| | | | | | | | | |
| | | | | | | | | |
| | | | | | | | | |

**NOTE:** Date & initial all entries

# Work Order ID 74221

*Tuesday, September 27, 2011 12:26:01 PM*



**Item ID:** D206-642-151 **Accept** **Setup Start**

**Revision ID:** **Stop**

**Item Name:** Replacement Skidtube

**Start Date:** 10/3/2011 **Start Qty:** 1.00 **Cust Item ID:**

**Required Date:** 11/4/2011 **Req'd Qty:** 1.00 **Customer:**

**Reference:**

**Approvals:** **Process Plan:** _____ **Date:** _____ **Tooling:** _____ **Date:** _____ **Run Start**

**QC:** _____ **Date:** _____ **SPC (Y/N):** _____ **Date:** _____ **Stop**

| Sequence ID/ Work Center ID | Operation Description | Set Up/ Run Hours | Tool ID | Tool # | Plan Code | Accept Qty | Reject Qty | Reject Number | Insp. Stamp |
|---|---|---|---|---|---|---|---|---|---|
| 110 | | 0.00 | | | | | | | |
| Skidtubes | Skidtubes | | | | | | | | |
| Skidtubes | **Memo** | 0.00 | | | | | | | |

1-Deburr Fwd edge of tube

2- Remove ridge on inside of Fwd edge of tube as per Dwg D3804 > DP 11-10-15

3-Weld Fwd Cap as per Dwg D3804. Use aluminum rod. Grind D2647 to fit as required.
Pick:
Qty ☐Part Number☐ Description☐Batch
A/R☐☐ Aluminum Rod☐ M117884/M118736 > BE 11/10/18

4-Grind weld flush to cap on top surface only.

5-Cut Aft end as per dwg D3804 from front of tube and Deburr SAD ~~TEH~~ 11-10-21 ①

6-Remove inner indexing ridge on Aft end of skidtube as per Dwg D3804

7-Open holes for Aft end cap as per Dwg D3804 with #30 Drill Bit using DT8025.

8-Drill pilot holes using Dt8166 & DT8169D & DT9771.

SAD 11-10-25 ①

9-Locate DT8732 from inner Aft saddle hole & 3rd crossbolt hole. Insert D3286-1 doubler using DT8732 & D206-642-241-T1, then locating doubler off of 3/16" holes, cleco DT8732 & doubler leaving DT8732 for added support.

10- Drill D3286-1 doubler rivet holes in tube using # 30 drill, spot drilling doubler at the same time.

> DP 11-10-26

Dart Aerospace Ltd

| W/O: | | WORK ORDER CHANGES | | | | | |
|---|---|---|---|---|---|---|---|
| DATE | STEP | PROCEDURE CHANGE | By | Date | Qty | Approval Chief Eng / Prod Mgr. | Approval QC Inspector |
| | | | | | | | |
| | | | | | | | |

**Part No:** _____ **PAR #:** _____ **Fault Category:** _____ **NCR:** Yes No **DQA:** _____ **Date:** _____

**Resolution:** _____ **Disposition:** _____ **QA: N/C Closed:** _____ **Date:** _____

| NCR: | | WORK ORDER NON-CONFORMANCE (NCR) | | | | | | |
|---|---|---|---|---|---|---|---|---|
| DATE | STEP | Description of NC Section A | Corrective Action Section B | | | Verification Section C | Approval Chief Eng | Approval QC Inspector |
| | | | Initial Chief Eng | Action Description Chief Eng | Sign & Date | | | |
| | | | | | | | | |
| | | | | | | | | |
| | | | | | | | | |

**NOTE:** Date & initial all entries

# Work Order ID 74221

*Tuesday, September 27, 2011 12:26:01 PM*



**Item ID:** D206-642-151 **Accept** **Setup** **Start**

**Revision ID:**

**Item Name:** Replacement Skidtube **Stop**

**Start Date:** 10/3/2011 **Start Qty:** 1.00 **Cust Item ID:**

**Required Date:** 11/4/2011 **Req'd Qty:** 1.00 **Customer:**

**Reference:**

**Approvals:** **Process Plan:** _____ **Date:** _____ **Tooling:** _____ **Date:** _____ **Run** **Start**

**QC:** _____ **Date:** _____ **SPC (Y/N):** _____ **Date:** _____ **Stop**

| Sequence ID/ Work Center ID | Operation Description | Set Up/ Run Hours | Tool ID | Tool # | Plan Code | Accept Qty | Reject Qty | Reject Number | Insp. Stamp |
|---|---|---|---|---|---|---|---|---|---|
| | 11-Working from the center out, drill # 30 holes into D3286-1 doubler. Cleco each hole as it is being drilled. Verify angle of holes to accommodate rivet heads.<br><br>12-Remove 3/16" cleco's only and open GHW holes to Ø0.500" as per Dwg D3804<br><br>13-Remove D3286-1 doubers, identify orientation, deburr, then attach them to the workorder | | | | | | | | |
| | 14-Remove indexing edge using DT8741 as per Dwg D3804<br><br>15-C'sink GHW rivet holes as per Dwg D3804<br><br>16- Open Aft cap hole #6.<br>****no wearplate holes for this skidtube**** | | | | | | | | |
| | 17-Deburr tube and blow out chips from inside the tube | | | | | | | | |
| 120 | QC6- Inspect dimensions to drawing | 0.00 | | | | | | | |
| QC | **Memo** | 0.00 | | | | | | | |
| Quality Control | | | | | | | | | |

11-10-26

DL 11/10/27

Sulco/27

Dart Aerospace Ltd

| W/O: | | WORK ORDER CHANGES | | | | | |
|---|---|---|---|---|---|---|---|
| DATE | STEP | PROCEDURE CHANGE | By | Date | Qty | Approval Chief Eng / Prod Mgr | Approval QC Inspector |
| | | | | | | | |
| | | | | | | | |

**Part No:** _____ **PAR #:** _____ **Fault Category:** _____ **NCR:** Yes No **DQA:** _____ **Date:** _____

**Resolution:** _____ **Disposition:** _____ **QA: N/C Closed:** _____ **Date:** _____

| NCR: | | WORK ORDER NON-CONFORMANCE (NCR) | | | | | | |
|---|---|---|---|---|---|---|---|---|
| DATE | STEP | Description of NC Section A | Corrective Action Section B | | | Verification Section C | Approval Chief Eng | Approval QC Inspector |
| | | | Initial Chief Eng | Action Description Chief Eng | Sign & Date | | | |
| | | | | | | | | |
| | | | | | | | | |
| | | | | | | | | |

**NOTE:** Date & initial all entries

# Work Order ID 74221

*Tuesday, September 27, 2011 12:26:01 PM*



**Item ID:** D206-642-151 **Accept** **Setup Start** **Stop**

**Revision ID:**

**Item Name:** Replacement Skidtube

**Start Date:** 10/3/2011 **Start Qty:** 1.00 **Cust Item ID:**

**Required Date:** 11/4/2011 **Req'd Qty:** 1.00 **Customer:**

**Reference:**

**Approvals:** **Process Plan:** _____ **Date:** _____ **Tooling:** _____ **Date:** _____ **Run Start** **Stop**

**QC:** _____ **Date:** _____ **SPC (Y/N):** _____ **Date:** _____

| Sequence ID/ Work Center ID | Operation Description | Set Up/ Run Hours | Tool ID | Tool # | Plan Code | Accept Qty | Reject Qty | Reject Number | Insp. Stamp |
|---|---|---|---|---|---|---|---|---|---|
| 140 | Chemical Conversion Coat per QSI005 4.1 | 0.00 | | | | | | | |
| HandFinish | **Memo** | 0.00 | | | | | | | |
| Hand Finishing | | | DL 11/10/27 | | | | | | |
| 150 | QC3- Inspect Part Finish | 0.00 | | | | | | | |
| QC | **Memo** | 0.00 | | | | | | | |
| Quality Control | | | DP 11-10-27 | | | | | | |
| 160 | | 0.00 | | | | | | | |
| Skidtubes | Skidtubes | | | | | | | | |
| Skidtubes | **Memo** | 0.00 | | | | | | | |
| | 1-Open holes to finished size as per Dwg D3804, (without cutting fluid) | | | | | | | | |
| | 2-C'sink crossbolt spacer holes as per Dwg D3804(without cutting fluid) | | | | | | | | |
| | 3-Deburr and blow out all chips from inside the tube | | DP 11-10-27 | | | | | | |

Dart Aerospace Ltd

| W/O: | | WORK ORDER CHANGES | | | | | |
|---|---|---|---|---|---|---|---|
| DATE | STEP | PROCEDURE CHANGE | By | Date | Qty | Approval Chief Eng / Prod Mgr | Approval QC Inspector |
| | | | | | | | |
| | | | | | | | |

**Part No:** _____ **PAR #:** _____ **Fault Category:** _____ **NCR:** Yes No **DQA:** _____ **Date:** _____

**Resolution:** _____ **Disposition:** _____ **QA: N/C Closed:** _____ **Date:** _____

| NCR: | | WORK ORDER NON-CONFORMANCE (NCR) | | | | | | |
|---|---|---|---|---|---|---|---|---|
| DATE | STEP | Description of NC Section A | Corrective Action Section B | | | Verification Section C | Approval Chief Eng | Approval QC Inspector |
| | | | Initial Chief Eng | Action Description Chief Eng | Sign & Date | | | |
| | | | | | | | | |
| | | | | | | | | |
| | | | | | | | | |

**NOTE:** Date & initial all entries

# Work Order ID 74221

*Tuesday, September 27, 2011 12:26:01 PM*



**Item ID:** D206-642-151 **Accept** **Setup** **Start**

**Revision ID:** **Stop**

**Item Name:** Replacement Skidtube

**Start Date:** 10/3/2011 **Start Qty:** 1.00 **Cust Item ID:**

**Required Date:** 11/4/2011 **Req'd Qty:** 1.00 **Customer:**

**Reference:**

**Approvals:** **Process Plan:** _____ **Date:** _____ **Tooling:** _____ **Date:** _____ **Run** **Start**

**QC:** _____ **Date:** _____ **SPC (Y/N):** _____ **Date:** _____ **Stop**

| Sequence ID/ Work Center ID | Operation Description | Set Up/ Run Hours | Tool ID | Tool # | Plan Code | Accept Qty | Reject Qty | Reject Number | Insp. Stamp |
|---|---|---|---|---|---|---|---|---|---|
| 170 | QC6- Inspect dimensions to drawing | 0.00 | | | | | | | |
| QC | | | | | | 1 | 0 | | BE 11/10/27 |
| Quality Control | **Memo** | 0.00 | | | | | | | |
| 180 | | 0.00 | | | | | | | |
| Skidtubes | Skidtubes | | | | | | | | |
| Skidtubes | **Memo** | 0.00 | | | | | | | |

1-Locate, install and rivet doublers as per Dwg D3804. Micro-shave rivets as required

BE 11/10/27

2-Bond D2654-3 web in place as per QSI 015. Ensure holes line up.Allow 12 Hrs. cure time before cutting

Start Date:☐ 11/10/27 ☐Time:☐ 5:00 ☐

Finish Date:☐ 11/10/28 ☐Time:☐ 430

BE 11/10/27

Pick:

Qty ☐Part Number☐Description☐Batch

A/R☐☐Sikaflex-291☐ 119399 ☐☐

Sikaflex expire date:☐ 12/08/13

Dart Aerospace Ltd

| W/O: | | WORK ORDER CHANGES | | | | | |
|---|---|---|---|---|---|---|---|
| DATE | STEP | PROCEDURE CHANGE | By | Date | Qty | Approval Chief Eng / Prod Mgr | Approval QC Inspector |
| | | | | | | | |
| | | | | | | | |

**Part No:** _____ **PAR #:** _____ **Fault Category:** _____ **NCR:** Yes No **DQA:** _____ **Date:** _____

**Resolution:** _____ **Disposition:** _____ **QA: N/C Closed:** _____ **Date:** _____

| NCR: | | WORK ORDER NON-CONFORMANCE (NCR) | | | | | | |
|---|---|---|---|---|---|---|---|---|
| DATE | STEP | Description of NC Section A | Corrective Action Section B | | | Verification Section C | Approval Chief Eng | Approval QC Inspector |
| | | | Initial Chief Eng | Action Description Chief Eng | Sign & Date | | | |
| | | | | | | | | |
| | | | | | | | | |
| | | | | | | | | |

**NOTE:** Date & initial all entries

# Work Order ID 74221

*Tuesday, September 27, 2011 12:26:01 PM*



**Item ID:** D206-642-151 **Accept** **Setup** **Start**

**Revision ID:** **Stop**

**Item Name:** Replacement Skidtube

**Start Date:** 10/3/2011 **Start Qty:** 1.00 **Cust Item ID:**

**Required Date:** 11/4/2011 **Req'd Qty:** 1.00 **Customer:**

**Reference:**

**Run** **Start** **Stop**

**Approvals:** **Process Plan:** _____ **Date:** _____ **Tooling:** _____ **Date:** _____

**QC:** _____ **Date:** _____ **SPC (Y/N):** _____ **Date:** _____

| Sequence ID/ Work Center ID | Operation Description | Set Up/ Run Hours | Tool ID | Tool # | Plan Code | Accept Qty | Reject Qty | Reject Number | Insp. Stamp |
|---|---|---|---|---|---|---|---|---|---|
| 190 | QC5- Inspect part completeness to step on W/O | 0.00 Sullobs | | | | | | | |
| QC | **Memo** | 0.00 | | | | | | | |
| Quality Control | | | | | | | | | |

Dart Aerospace Ltd

| W/O: | | WORK ORDER CHANGES | | | | | |
|---|---|---|---|---|---|---|---|
| DATE | STEP | PROCEDURE CHANGE | By | Date | Qty | Approval Chief Eng / Prod Mgr | Approval QC Inspector |
| | | | | | | | |
| | | | | | | | |

**Part No:** _____ **PAR #:** _____ **Fault Category:** _____ **NCR:** Yes No **DQA:** _____ **Date:** _____

**Resolution:** _____ **Disposition:** _____ **QA: N/C Closed:** _____ **Date:** _____

| NCR: | | WORK ORDER NON-CONFORMANCE (NCR) | | | | | | |
|---|---|---|---|---|---|---|---|---|
| DATE | STEP | Description of NC Section A | Corrective Action Section B | | | Verification Section C | Approval Chief Eng | Approval QC Inspector |
| | | | Initial Chief Eng | Action Description Chief Eng | Sign & Date | | | |
| | | | | | | | | |
| | | | | | | | | |
| | | | | | | | | |

**NOTE:** Date & initial all entries

# Work Order ID 74221

*Tuesday, September 27, 2011 12:26:01 PM*



**Item ID:** D206-642-151 **Accept** **Setup Start** **Stop**

**Revision ID:**

**Item Name:** Replacement Skidtube

**Start Date:** 10/3/2011 **Start Qty:** 1.00 **Cust Item ID:**

**Required Date:** 11/4/2011 **Req'd Qty:** 1.00 **Customer:**

**Reference:**

**Approvals:** **Process Plan:** _____ **Date:** _____ **Tooling:** _____ **Date:** _____ **Run Start** **Stop**

**QC:** _____ **Date:** _____ **SPC (Y/N):** _____ **Date:** _____

| Sequence ID/ Work Center ID | Operation Description | Set Up/ Run Hours | Tool ID | Tool # | Plan Code | Accept Qty | Reject Qty | Reject Number | Insp. Stamp |
|---|---|---|---|---|---|---|---|---|---|
| 200 | | 0.00 | | | | | | | |
| Skidtubes | Skidtubes | | | | | | | | |
| Skidtubes | **Memo** | 0.00 | | | | | | | |

1-remove alodine from around hole and prepare for welding

2-Prep per QSI 005 and Insert D2649 crossbolt spacers. Weld as per QSI 004 and Dwg D3804. Remember to back drill each hole to 0.25" before welding the other side. Use aluminum rod. BE 11/10/28

Pick:

Qty□Part Number□Description□Batch

A/R□□Aluminum Rod□ M117884

3-Grind welds flush as per Dwg D3804. B 11/10/29

4-Using DT8733, insert (2) D3286-3 spacers as per QSI 004 and Dwg D3804. Remember to back drill each hole to Ø0.402" before welding other side. Use SS rod as required.

A/R□SS Rod□ NONE BE 11/10/29

5-Counterbore 5/16" x 0.750" deep except 7th hole from Aft end as per Dwg D3804. Deburr DP 11-10-31

Dart Aerospace Ltd

| W/O: | | WORK ORDER CHANGES | | | | | |
|---|---|---|---|---|---|---|---|
| DATE | STEP | PROCEDURE CHANGE | By | Date | Qty | Approval Chief Eng / Prod Mgr | Approval QC Inspector |
| | | | | | | | |
| | | | | | | | |

**Part No:** _____ **PAR #:** _____ **Fault Category:** _____ **NCR:** Yes No **DQA:** _____ **Date:** _____

**Resolution:** _____ **Disposition:** _____ **QA: N/C Closed:** _____ **Date:** _____

| NCR: | | WORK ORDER NON-CONFORMANCE (NCR) | | | | | | |
|---|---|---|---|---|---|---|---|---|
| DATE | STEP | Description of NC Section A | Corrective Action Section B | | | Verification Section C | Approval Chief Eng | Approval QC Inspector |
| | | | Initial Chief Eng | Action Description Chief Eng | Sign & Date | | | |
| | | | | | | | | |
| | | | | | | | | |
| | | | | | | | | |

**NOTE:** Date & initial all entries

# Work Order ID 74221

*Tuesday, September 27, 2011 12:26:01 PM*



**Item ID:** D206-642-151 **Accept** **Setup Start** **Stop**

**Revision ID:**

**Item Name:** Replacement Skidtube

**Start Date:** 10/3/2011 **Start Qty:** 1.00 **Cust Item ID:**

**Required Date:** 11/4/2011 **Req'd Qty:** 1.00 **Customer:**

**Reference:**

**Run Start** **Stop**

**Approvals:** **Process Plan:** _____ **Date:** _____ **Tooling:** _____ **Date:** _____

**QC:** _____ **Date:** _____ **SPC (Y/N):** _____ **Date:** _____

| Sequence ID/ Work Center ID | Operation Description | Set Up/ Run Hours | Tool ID | Tool # | Plan Code | Accept Qty | Reject Qty | Reject Number | Insp. Stamp |
|---|---|---|---|---|---|---|---|---|---|
| 210 | HandFinishing | 0.00 | | | | | | | |
| HandFinish | | | | | | | | | |
| Hand Finishing | **Memo** Install D2680-041 Nut Plate as per Dwg D3804 | 0.00 | DP | | 11-10-31 | | | | |
| 215 | QC9- Inspect visual per QSI004- Fusion Welds | 0.00 | | | | | | | |
| QC | **Memo** | 0.00 | 11·11·01 | | | 1 | Ø | | |
| Quality Control | | | | | | | | | |
| 220 | QC10- Inspect visual per QSI004- ground welds | 0.00 | | | | | | | |
| QC | **Memo** | 0.00 | 11·11·01 | | | 1 | Ø | | |
| Quality Control | | | | | | | | | |

Dart Aerospace Ltd

| W/O: | | WORK ORDER CHANGES | | | | | |
|---|---|---|---|---|---|---|---|
| DATE | STEP | PROCEDURE CHANGE | By | Date | Qty | Approval Chief Eng / Prod Mgr | Approval QC Inspector |
| | | | | | | | |
| | | | | | | | |

**Part No:** _____ **PAR #:** _____ **Fault Category:** _____ **NCR:** Yes No **DQA:** _____ **Date:** _____

**Resolution:** _____ **Disposition:** _____ **QA: N/C Closed:** _____ **Date:** _____

| NCR: | | WORK ORDER NON-CONFORMANCE (NCR) | | | | | | |
|---|---|---|---|---|---|---|---|---|
| DATE | STEP | Description of NC Section A | Corrective Action Section B | | | Verification Section C | Approval Chief Eng | Approval QC Inspector |
| | | | Initial Chief Eng | Action Description Chief Eng | Sign & Date | | | |
| | | | | | | | | |
| | | | | | | | | |
| | | | | | | | | |

**NOTE:** Date & initial all entries

# Work Order ID 74221

*Tuesday, September 27, 2011 12:26:02 PM*



**Item ID:** D206-642-151 **Accept** **Setup Start**

**Revision ID:**

**Item Name:** Replacement Skidtube **Stop**

**Start Date:** 10/3/2011 **Start Qty:** 1.00 **Cust Item ID:**

**Required Date:** 11/4/2011 **Req'd Qty:** 1.00 **Customer:**

**Reference:**

**Approvals:** **Process Plan:** _____ **Date:** _____ **Tooling:** _____ **Date:** _____ **Run Start**

**QC:** _____ **Date:** _____ **SPC (Y/N):** _____ **Date:** _____ **Stop**

| Sequence ID/ Work Center ID | Operation Description | Set Up/ Run Hours | Tool ID | Tool # | Plan Code | Accept Qty | Reject Qty | Reject Number | Insp. Stamp |
|---|---|---|---|---|---|---|---|---|---|
| 230 | QC5- Inspect part completeness to step on W/O | 0.00 | | | | | | | |
| QC | **Memo** | 0.00 | | | | m | 11- | 11- | 01 ① |
| Quality Control | | | | | | | | | |
| 240 | Pressure Wash per QSI005 4.3 | 0.00 | | | | | | | |
| HandFinish | **Memo** | 0.00 | | | | 1X∅ | m-f | 11/11/02 | |
| Hand Finishing | | | | | | | | | |
| 250 | White Gloss(Ref:4.3.5.1) per QSI005 4.3-Alum | 0.00 | | | | | | | |
| Powdercoat | **Memo** | 0.00 | | | | 1X∅ | m-f | 11/11/02 | |
| Powder Coating | START TIME: 2:30<br>OVEN TEMPERATURE: 320 01<br>FINISH TIME: 3:00 | | | | | | | | |

M118434

Dart Aerospace Ltd

| W/O: | | WORK ORDER CHANGES | | | | | |
|---|---|---|---|---|---|---|---|
| DATE | STEP | PROCEDURE CHANGE | By | Date | Qty | Approval Chief Eng / Prod Mgr | Approval QC Inspector |
| | | | | | | | |
| | | | | | | | |

**Part No:** _____ **PAR #:** _____ **Fault Category:** _____ **NCR:** Yes No **DQA:** _____ **Date:** _____

**Resolution:** _____ **Disposition:** _____ **QA: N/C Closed:** _____ **Date:** _____

| NCR: | | WORK ORDER NON-CONFORMANCE (NCR) | | | | | | |
|---|---|---|---|---|---|---|---|---|
| DATE | STEP | Description of NC Section A | Corrective Action Section B | | | Verification Section C | Approval Chief Eng | Approval QC Inspector |
| | | | Initial Chief Eng | Action Description Chief Eng | Sign & Date | | | |
| | | | | | | | | |
| | | | | | | | | |
| | | | | | | | | |

**NOTE:** Date & initial all entries

# Work Order ID 74221 LH

*Tuesday, September 27, 2011 12:26:02 PM*



**Item ID:** D206-642-151 **Accept** **Setup Start**

**Revision ID:** **Stop**

**Item Name:** Replacement Skidtube

**Start Date:** 10/3/2011 **Start Qty:** 1.00 **Cust Item ID:**

**Required Date:** 11/4/2011 **Req'd Qty:** 1.00 **Customer:**

**Reference:**

**Run Start**

**Approvals:** **Process Plan:** _____ **Date:** _____ **Tooling:** _____ **Date:** _____

**Stop**

**QC:** _____ **Date:** _____ **SPC (Y/N):** _____ **Date:** _____

| Sequence ID/ Work Center ID | Operation Description | Set Up/ Run Hours | Tool ID | Tool # | Plan Code | Accept Qty | Reject Qty | Reject Number | Insp. Stamp |
|---|---|---|---|---|---|---|---|---|---|
| 260 | QC3- Inspect Part Finish | 0.00 | | | | | | | |
| QC | **Memo** | 0.00 | | | | LH | 0 | M | 11/11/07 |
| Quality Control | | | | | | | | | |
| 270 | HandFinishing | 0.00 | | | | | | | |
| HandFinish | **Memo** | 0.00 | | | | LH | 0 | M | 11/11/07 |
| Hand Finishing | 1-Install D2651-3 O-Rings on D2651-1 plugs with Petroleum Jelly and install plugs as per Dwg D3804. Clean excess adhesive. | | | | | | | | |

Dart Aerospace Ltd

| W/O: | | WORK ORDER CHANGES | | | | | |
|---|---|---|---|---|---|---|---|
| DATE | STEP | PROCEDURE CHANGE | By | Date | Qty | Approval Chief Eng / Prod Mgr | Approval QC Inspector |
| | | | | | | | |
| | | | | | | | |

**Part No:** _____ **PAR #:** _____ **Fault Category:** _____ **NCR:** Yes No **DQA:** _____ **Date:** _____

**Resolution:** _____ **Disposition:** _____ **QA: N/C Closed:** _____ **Date:** _____

| NCR: | | WORK ORDER NON-CONFORMANCE (NCR) | | | | | | |
|---|---|---|---|---|---|---|---|---|
| DATE | STEP | Description of NC Section A | Corrective Action Section B | | | Verification Section C | Approval Chief Eng | Approval QC Inspector |
| | | | Initial Chief Eng | Action Description Chief Eng | Sign & Date | | | |
| | | | | | | | | |
| | | | | | | | | |
| | | | | | | | | |

**NOTE:** Date & initial all entries

# Work Order ID 74221 LH

*Tuesday, September 27, 2011 12:26:02 PM*

**Item ID:** D206-642-151 **Accept** **Setup Start**

**Revision ID:**

**Item Name:** Replacement Skidtube **Stop**

**Start Date:** 10/3/2011 **Start Qty:** 1.00 **Cust Item ID:**

**Required Date:** 11/4/2011 **Req'd Qty:** 1.00 **Customer:**

**Reference:**

**Approvals:** **Process Plan:** _____ **Date:** _____ **Tooling:** _____ **Date:** _____ **Run Start**

**QC:** _____ **Date:** _____ **SPC (Y/N):** _____ **Date:** _____ **Stop**

| Sequence ID/ Work Center ID | Operation Description | Set Up/ Run Hours | Tool ID | Tool # | Plan Code | Accept Qty | Reject Qty | Reject Number | Insp. Stamp |
|---|---|---|---|---|---|---|---|---|---|
| 280 | | 0.00 | | | | | | | |
| HandFinish | HandFinishing | | | | | 144 | 0 | M | 11/11/15 |
| Hand Finishing | **Memo** | 0.00 | | | | | | | |
| | 1-Install D2646 Aft Cap and seal with Sikaflex. Clean excess adhesive<br>A/R☐☐Sikaflex-291☐ A/1 119 4413<br>Sikaflex expire date:☐ 12/01 | | | | | | | | |
| | 2- Install wearplate as per dwg | | | | | | | | |
| | 2-Wing Walk as per Dwg D3804 and QSI 005 4.4☐<br>Batch: A11 11 8990 | | | | | | | | |
| 290 | QC3- Inspect Part Finish | 0.00 | | | | | | | |
| QC | **Memo** | 0.00 | | | | | | | |
| Quality Control | | | | | | | | | |

11-11-15

Dart Aerospace Ltd

| W/O: | | WORK ORDER CHANGES | | | | | |
|---|---|---|---|---|---|---|---|
| DATE | STEP | PROCEDURE CHANGE | By | Date | Qty | Approval Chief Eng / Prod Mgr | Approval QC Inspector |
| | | | | | | | |
| | | | | | | | |

**Part No:** _____ **PAR #:** _____ **Fault Category:** _____ **NCR:** Yes No **DQA:** _____ **Date:** _____

**Resolution:** _____ **Disposition:** _____ **QA: N/C Closed:** _____ **Date:** _____

| NCR: | | WORK ORDER NON-CONFORMANCE (NCR) | | | | | | |
|---|---|---|---|---|---|---|---|---|
| DATE | STEP | Description of NC Section A | Corrective Action Section B | | | Verification Section C | Approval Chief Eng | Approval QC Inspector |
| | | | Initial Chief Eng | Action Description Chief Eng | Sign & Date | | | |
| | | | | | | | | |
| | | | | | | | | |
| | | | | | | | | |

**NOTE:** Date & initial all entries

# Work Order ID 74221

*Tuesday, September 27, 2011 12:26:02 PM*



**Item ID:** D206-642-151 **Accept** **Setup Start** **Stop**

**Revision ID:**

**Item Name:** Replacement Skidtube

**Start Date:** 10/3/2011 **Start Qty:** 1.00 **Cust Item ID:**

**Required Date:** 11/4/2011 **Req'd Qty:** 1.00 **Customer:**

**Reference:**

**Approvals:** **Process Plan:** _____ **Date:** _____ **Tooling:** _____ **Date:** _____ **Run Start** **Stop**

**QC:** _____ **Date:** _____ **SPC (Y/N):** _____ **Date:** _____

| Sequence ID/ Work Center ID | Operation Description | Set Up/ Run Hours | Tool ID | Tool # | Plan Code | Accept Qty | Reject Qty | Reject Number | Insp. Stamp |
|---|---|---|---|---|---|---|---|---|---|
| 300 | QC5- Inspect part completeness to step on W/O | 0.00 | | | | | | | |
| QC | **Memo** | 0.00 | | | | | 11 - 11 - 15 | | |
| Quality Control | | | | | | | | | |
| 310 | | 0.00 | | | | | | | |
| Packaging | Packaging | | | | | 11/11/16 | | | |
| Packaging | **Memo** | 0.00 | | | | | | | |
| | Identify and pack for shipping as per PPP D206-642-151<br>Location:_____<br>PPP Rev:_____ | | | | | | | | |
| 320 | QC21- Final Inspection - Work Order Release | 0.00 | | | | | 11/11/17 | | |
| QC | **Memo** | 0.00 | | | | | | | |
| Quality Control | | | | | | | | | |

MF
11-11-16

Dart Aerospace Ltd

| W/O: | | WORK ORDER CHANGES | | | | | |
|---|---|---|---|---|---|---|---|
| DATE | STEP | PROCEDURE CHANGE | By | Date | Qty | Approval Chief Eng / Prod Mgr | Approval QC Inspector |
| | | | | | | | |
| | | | | | | | |

**Part No:** _____ **PAR #:** _____ **Fault Category:** _____ **NCR:** Yes No **DQA:** _____ **Date:** _____

**Resolution:** _____ **Disposition:** _____ **QA: N/C Closed:** _____ **Date:** _____

| NCR: | | WORK ORDER NON-CONFORMANCE (NCR) | | | | | | |
|---|---|---|---|---|---|---|---|---|
| DATE | STEP | Description of NC Section A | Corrective Action Section B | | | Verification Section C | Approval Chief Eng | Approval QC Inspector |
| | | | Initial Chief Eng | Action Description Chief Eng | Sign & Date | | | |
| | | | | | | | | |
| | | | | | | | | |
| | | | | | | | | |

**NOTE:** Date & initial all entries

H:\fFORMS\Quality Assurance\approved QA\NCRWO RevE

# Picklist Print

*Tuesday, September 27, 2011 12:25:57 PM*



**Work Order ID:** 74221

**Parent Item:** D206-642-151

**Parent Item Name:** Replacement Skidtube

**Start Date:** 10/3/2011 **Required Date:** 11/4/2011

**Start Qty:** 1.00 **Required Qty:** 1.00

**Comments:** IPP REV:A 10.12.08 PER IIN REV.N DD VERF:EC IPP
REV:B 11.09.16 PER IIN REV.O DD VERF:EC

| Component Item ID/ Item Name | Replacement Item ID | Mfg/ Purch | Bin Item | Primary Location | Last Location | Route Seq ID | Unit of Measure | Qty on Hand | Qty per Kit | Total Qty | Qty Issued | Date Issued | Status |
|---|---|---|---|---|---|---|---|---|---|---|---|---|---|
| D2620 | | Manufactured | No | | | 110 | Each | 23.0000 | 1 | 1 | | | |
| Skidtube, 206 Skidtube | | | | | | | | | | | | | |

| Location | | Loc Qty | Loc Code |
|---|---|---|---|
| LG | 73783 | 23 | |
| | 71616 | 5 | |
| | 71617 | 6 | |
| | 73781 | 5 | |
| | 73786 | 3 | |
| | 73787 | 4 | |

11-10-15

| Component Item ID/ Item Name | Replacement Item ID | Mfg/ Purch | Bin Item | Primary Location | Last Location | Route Seq ID | Unit of Measure | Qty on Hand | Qty per Kit | Total Qty | Qty Issued | Date Issued | Status |
|---|---|---|---|---|---|---|---|---|---|---|---|---|---|
| D2647 | | Manufactured | No | | | 110 | Each | 36.0000 | 1 | 1 | | | |
| Cap | | | | | | | | | | | | | |

BE 11/10/18

B73826 x1

| Location | | Loc Qty | Loc Code |
|---|---|---|---|
| LG002 | | 36 | |
| | 55352 | 8 | |
| | 71171 | 28 | |

| Component Item ID/ Item Name | Replacement Item ID | Mfg/ Purch | Bin Item | Primary Location | Last Location | Route Seq ID | Unit of Measure | Qty on Hand | Qty per Kit | Total Qty | Qty Issued | Date Issued | Status |
|---|---|---|---|---|---|---|---|---|---|---|---|---|---|
| CR3212-4-04 | | Purchased | No | | | 180 | Each | 10,997.00 | 52 | 52 | | | |
| Cherry Rivet | | | | | | | | | | | | | |

BE 11/10/27

| Location | | Loc Qty | Loc Code |
|---|---|---|---|
| ST311 | | 997 | |
| | 116471 | 78 | |
| | 117816 | 179 | |
| | 118686 | 1 | |
| | 118840 | 739 | |
| ST516 | | 10000 | |
| | 119017 | 10000 | |

52

Dart Aerospace Ltd

| W/O: | | WORK ORDER CHANGES | | | | | |
|---|---|---|---|---|---|---|---|
| DATE | STEP | PROCEDURE CHANGE | By | Date | Qty | Approval Chief Eng / Prod Mgr | Approval QC Inspector |
| | | | | | | | |
| | | | | | | | |

**Part No:** _____ **PAR #:** _____ **Fault Category:** _____ **NCR:** Yes No **DQA:** _____ **Date:** _____

**Resolution:** _____ **Disposition:** _____ **QA: N/C Closed:** _____ **Date:** _____

| NCR: | | WORK ORDER NON-CONFORMANCE (NCR) | | | | | | |
|---|---|---|---|---|---|---|---|---|
| DATE | STEP | Description of NC Section A | Corrective Action Section B | | | Verification Section C | Approval Chief Eng | Approval QC Inspector |
| | | | Initial Chief Eng | Action Description Chief Eng | Sign & Date | | | |
| | | | | | | | | |
| | | | | | | | | |
| | | | | | | | | |

**NOTE:** Date & initial all entries

H:\fFORMS\Quality Assurance\approved QA\NCRWO RevE

# Picklist Print

*Tuesday, September 27, 2011 12:25:57 PM*



**Work Order ID:** 74221

**Parent Item:** D206-642-151

**Parent Item Name:** Replacement Skidtube

**Start Date:** 10/3/2011 **Required Date:** 11/4/2011

**Start Qty:** 1.00 **Required Qty:** 1.00

| | | | | | | | | |
|---|---|---|---|---|---|---|---|---|
| D2654-1<br>Web | Manufactured | No | 180 | Each | 12.0000 | 1 | 1 | 1 |

| Location | Loc Qty | Loc Code |
|---|---|---|
| LG 73793 | 12 | |
| 73789 | 10 | |
| 73790 | 2 | |

| | | | | | | | | |
|---|---|---|---|---|---|---|---|---|
| D3286-1<br>Doubler | Manufactured | No | 180 | Each | 80.0000 | 2 | 2 | 2 11-10-26 |

| Location | Loc Qty | Loc Code |
|---|---|---|
| LG002 74441 | 80 | |
| 64563 | 6 | |
| 74111 | 74 | |

| | | | | | | | | |
|---|---|---|---|---|---|---|---|---|
| D2649<br>Cross Bolt Spacer | Manufactured | No | 200 | Each | 1,995.000 | 19 | 19 | BE 11/10/28 |

| Location | Loc Qty | Loc Code |
|---|---|---|
| LG | 736 | |
| 68224 | 2 | |
| 71355 | 2 | |
| 72704 | 2 | |
| 72841 | 130 | |
| 73855 | 600 | |
| LG001 | 1259 | |
| 65317 | 1 | |
| 68507 | 11 | |
| 73390 | 47 | |
| 73857 | 600 | |
| 73860 | 600 | 19 |

Dart Aerospace Ltd

| W/O: | | WORK ORDER CHANGES | | | | | |
|---|---|---|---|---|---|---|---|
| DATE | STEP | PROCEDURE CHANGE | By | Date | Qty | Approval Chief Eng / Prod Mgr | Approval QC Inspector |
| | | | | | | | |
| | | | | | | | |

**Part No:** _____ **PAR #:** _____ **Fault Category:** _____ **NCR:** Yes No **DQA:** _____ **Date:** _____

**Resolution:** _____ **Disposition:** _____ **QA: N/C Closed:** _____ **Date:** _____

| NCR: | | WORK ORDER NON-CONFORMANCE (NCR) | | | | | | |
|---|---|---|---|---|---|---|---|---|
| DATE | STEP | Description of NC Section A | Corrective Action Section B | | | Verification Section C | Approval Chief Eng | Approval QC Inspector |
| | | | Initial Chief Eng | Action Description Chief Eng | Sign & Date | | | |
| | | | | | | | | |
| | | | | | | | | |
| | | | | | | | | |

**NOTE:** Date & initial all entries

# Picklist Print

*Tuesday, September 27, 2011 12:25:57 PM*

**Work Order ID:** 74221

**Parent Item:** D206-642-151

**Parent Item Name:** Replacement Skidtube

**Start Date:** 10/3/2011 **Required Date:** 11/4/2011

**Start Qty:** 1.00 **Required Qty:** 1.00

| | | | | | | | | | |
|---|---|---|---|---|---|---|---|---|---|
| D3286-3 | Manufactured | No | 200 | Each | 98.0000 | 2 | 2 | | |
| Spacer | | | | | | | | | |

B 11/10/29
B 74439 ×2

| Location | | Loc Qty | Loc Code |
|---|---|---|---|
| LG001 | | 83 | |
| | 74117 | 83 | |
| LG002 | | 15 | |
| | 64564 | 15 | |

| | | | | | | | | | |
|---|---|---|---|---|---|---|---|---|---|
| D2680-041 | Manufactured | No | 210 | Each | 40.0000 | 1 | 1 | | |
| Nut Plate | | | | | | | | | |

| Location | | Loc Qty | Loc Code |
|---|---|---|---|
| LG | 73854 | 40 | |
| | 73334 | 40 | |

① DP 11-10-31

| | | | | | | | | | |
|---|---|---|---|---|---|---|---|---|---|
| CR3212-4-03 | Purchased | No | 210 | Each | 2,116.000 | 2 | 2 | | |
| Cherry Rivet | | | | | | | | | |

| Location | | Loc Qty | Loc Code |
|---|---|---|---|
| FP-B | | 2 | |
| | 110139 | 2 | |
| ST311 | | 1114 | |
| | 114859 | 1114 | |
| ST318 | | 1000 | |
| | 119017 | 1000 | |

② DP 11-10-31

| | | | | | | | | | |
|---|---|---|---|---|---|---|---|---|---|
| AN960JD416 NAS1149D0463J | Purchased | No | 210 | Each | 0.0000 | 1 | 1 | | |
| Washer | | | | | | | | | |

M116384 (V1) JU 11/10/07

Dart Aerospace Ltd

| W/O: | | WORK ORDER CHANGES | | | | | |
|---|---|---|---|---|---|---|---|
| DATE | STEP | PROCEDURE CHANGE | By | Date | Qty | Approval Chief Eng / Prod Mgr | Approval QC Inspector |
| | | | | | | | |
| | | | | | | | |

**Part No:** _____ **PAR #:** _____ **Fault Category:** _____ **NCR:** Yes No **DQA:** _____ **Date:** _____

**Resolution:** _____ **Disposition:** _____ **QA: N/C Closed:** _____ **Date:** _____

| NCR: | | WORK ORDER NON-CONFORMANCE (NCR) | | | | | | |
|---|---|---|---|---|---|---|---|---|
| DATE | STEP | Description of NC Section A | Corrective Action Section B | | | Verification Section C | Approval Chief Eng | Approval QC Inspector |
| | | | Initial Chief Eng | Action Description Chief Eng | Sign & Date | | | |
| | | | | | | | | |
| | | | | | | | | |
| | | | | | | | | |

**NOTE:** Date & initial all entries

# Picklist Print

*Tuesday, September 27, 2011 12:25:58 PM*

**Work Order ID:** 74221

**Parent Item:** D206-642-151

**Parent Item Name:** Replacement Skidtube

**Start Date:** 10/3/2011 **Required Date:** 11/4/2011

**Start Qty:** 1.00 **Required Qty:** 1.00

| | | | | | | | | |
|---|---|---|---|---|---|---|---|---|
| CCR264SS3-3<br>Cherry Rivet | Purchased | No | 210 | Each | 1,401.000 | 2 | 2 | |

| Location | Loc Qty | Loc Code |
|---|---|---|
| FP-B | 2 | |
| 113973 | 2 | |
| ST311 | 399 | |
| 117086 | 21 | |
| 117849 | 378 | |
| ST317 | 1000 | |
| 119017 | 1000 | |

2 11-10-31

| | | | | | | | | |
|---|---|---|---|---|---|---|---|---|
| MS27039-4-06<br>Screw | Purchased | No | 210 | Each | 29.0000 | 1 | 1 | 11/11/07 |

| Location | Loc Qty | Loc Code |
|---|---|---|
| FP-A | 8 | M 119124 |
| 115460 | 8 | |
| ST292 | 21 | |
| 115460 | 21 | |

X1

| | | | | | | | | |
|---|---|---|---|---|---|---|---|---|
| D2651-1<br>Plug | Manufactured | No | 270 | Each | 289.0000 | 6 | 6 | 11.11 07 |

| Location | Loc Qty | Loc Code |
|---|---|---|
| fpa | 109 | 373827 |
| 69018 | 109 | |
| FP-A | 180 | |
| 57869 | 1 | |
| 66445 | 10 | |
| 67760 | 36 | |
| 70691 | 100 | |
| 70839 | 2 | |
| 71037 | 31 | |

X6

Dart Aerospace Ltd

| W/O: | | WORK ORDER CHANGES | | | | | |
|---|---|---|---|---|---|---|---|
| DATE | STEP | PROCEDURE CHANGE | By | Date | Qty | Approval Chief Eng / Prod Mgr | Approval QC Inspector |
| | | | | | | | |
| | | | | | | | |

**Part No:** _____ **PAR #:** _____ **Fault Category:** _____ **NCR:** Yes No **DQA:** _____ **Date:** _____

**Resolution:** _____ **Disposition:** _____ **QA: N/C Closed:** _____ **Date:** _____

| NCR: | | WORK ORDER NON-CONFORMANCE (NCR) | | | | | | |
|---|---|---|---|---|---|---|---|---|
| DATE | STEP | Description of NC Section A | Corrective Action Section B | | | Verification Section C | Approval Chief Eng | Approval QC Inspector |
| | | | Initial Chief Eng | Action Description Chief Eng | Sign & Date | | | |
| | | | | | | | | |
| | | | | | | | | |
| | | | | | | | | |

**NOTE:** Date & initial all entries

# Picklist Print

*Tuesday, September 27, 2011 12:25:58 PM*

**Work Order ID:** 74221

**Parent Item:** D206-642-151

**Parent Item Name:** Replacement Skidtube

**Start Date:** 10/3/2011 **Required Date:** 11/4/2011

**Start Qty:** 1.00 **Required Qty:** 1.00

| | | | | | | | | |
|---|---|---|---|---|---|---|---|---|
| D2651-3 | Manufactured | No | 270 | Each | 1,799.000 | 6 | 6 | |
| O-Ring | | | | | | | | |

| Location | | Loc Qty | Loc Code | |
|---|---|---|---|---|
| FP-A | | 1799 | | |
| | 61962 | 12 | | |
| | 66956 | 282 | | |
| | 73489 | 505 | | x6 |
| | 73828 | 1000 | | |

| | | | | | | | | |
|---|---|---|---|---|---|---|---|---|
| D3873-1 | Manufactured | No | 280 | Each | 599.0000 | 14 | 14 | |
| Bushing | | | | | | | | |

| Location | | Loc Qty | Loc Code | |
|---|---|---|---|---|
| ST084 | | 4 | B73830 | x14 |
| | 68247 | 4 | | |
| ST088 | | 595 | | |
| | 64760 | 1 | | |
| | 70690 | 47 | | |
| | 71837 | 87 | | |
| | 73399 | 60 | | |
| | 73829 | 400 | | |

Dart Aerospace Ltd

| W/O: | | WORK ORDER CHANGES | | | | | |
|---|---|---|---|---|---|---|---|
| DATE | STEP | PROCEDURE CHANGE | By | Date | Qty | Approval Chief Eng / Prod Mgr | Approval QC Inspector |
| | | | | | | | |
| | | | | | | | |

**Part No:** _____ **PAR #:** _____ **Fault Category:** _____ **NCR:** Yes No **DQA:** _____ **Date:** _____

**Resolution:** _____ **Disposition:** _____ **QA: N/C Closed:** _____ **Date:** _____

| NCR: | | WORK ORDER NON-CONFORMANCE (NCR) | | | | | | |
|---|---|---|---|---|---|---|---|---|
| DATE | STEP | Description of NC Section A | Corrective Action Section B | | | Verification Section C | Approval Chief Eng | Approval QC Inspector |
| | | | Initial Chief Eng | Action Description Chief Eng | Sign & Date | | | |
| | | | | | | | | |
| | | | | | | | | |
| | | | | | | | | |

**NOTE:** Date & initial all entries

# Picklist Print

*Tuesday, September 27, 2011 12:25:58 PM*

**Work Order ID:** 74221

**Parent Item:** D206-642-151

**Parent Item Name:** Replacement Skidtube

**Start Date:** 10/3/2011 **Required Date:** 11/4/2011

**Start Qty:** 1.00 **Required Qty:** 1.00

| | | | | | | | | |
|---|---|---|---|---|---|---|---|---|
| D2646<br>Aft Cap | Manufactured | No | 280 | Each | 87.0000 | 1 | 1 | ll 11/11/07 |

| Location | | Loc Qty | Loc Code | |
|---|---|---|---|---|
| FP004 | | 43 | 073294 | X1 |
| | 68280 | 43 | | |
| FP006 | | 5 | | |
| | 62678 | 5 | | |
| FP-4 | | 35 | | |
| | 70945 | 1 | | |
| | 71070 | 34 | | |
| fp5 | | 4 | | |
| | 71038 | 4 | | |

| | | | | | | | | |
|---|---|---|---|---|---|---|---|---|
| D3805-041<br>Wearplate Assembly Fwd, Low Gear | Manufactured | No | 280 | Each | 0.0000 | 1 | 1 | 375942 (x1) ll 11/11/11 |
| MS27039-1-08<br>Screw | Purchased | No | 280 | Each | 1,216.000 | 2 | 2 | ll 11/11/07 |

| Location | | Loc Qty | Loc Code | |
|---|---|---|---|---|
| ST291 | | 1216 | | |
| | 115108 | 16 | | |
| | 117423 | 300 | | |
| | 118378 | 400 | | X2 |
| | 118910 | 500 | | |

Dart Aerospace Ltd

| W/O: | | WORK ORDER CHANGES | | | | | |
|---|---|---|---|---|---|---|---|
| DATE | STEP | PROCEDURE CHANGE | By | Date | Qty | Approval Chief Eng / Prod Mgr | Approval QC Inspector |
| | | | | | | | |
| | | | | | | | |

**Part No:** _____ **PAR #:** _____ **Fault Category:** _____ **NCR:** Yes No **DQA:** _____ **Date:** _____

**Resolution:** _____ **Disposition:** _____ **QA: N/C Closed:** _____ **Date:** _____

| NCR: | | WORK ORDER NON-CONFORMANCE (NCR) | | | | | | |
|---|---|---|---|---|---|---|---|---|
| DATE | STEP | Description of NC Section A | Corrective Action Section B | | | Verification Section C | Approval Chief Eng | Approval QC Inspector |
| | | | Initial Chief Eng | Action Description Chief Eng | Sign & Date | | | |
| | | | | | | | | |
| | | | | | | | | |
| | | | | | | | | |

**NOTE:** Date & initial all entries

# Picklist Print

*Tuesday, September 27, 2011 12:25:58 PM*

**Work Order ID:** 74221

**Parent Item:** D206-642-151

**Parent Item Name:** Replacement Skidtube

**Start Date:** 10/3/2011 **Required Date:** 11/4/2011

**Start Qty:** 1.00 **Required Qty:** 1.00

| | | | | | | | | |
|---|---|---|---|---|---|---|---|---|
| MS21042L3<br>Nut | Purchased | No | 280 | Each | 8,411.000 | 7 | 7 | M 11/11/07 |

| Location | | Loc Qty | Loc Code | |
|---|---|---|---|---|
| ST300 | | 2411 | | |
| | 117441 | 16 | | |
| | 117601 | 240 | | |
| | 117885 | 155 | | |
| | 118451 | 1000 | | |
| | 118927 | 1000 | | X 7 |
| ST516 | | 6000 | | |
| | 119017 | 6000 | | |

| | | | | | | | | |
|---|---|---|---|---|---|---|---|---|
| D3805-045<br>Wearplate Assembly Aft, Low Gear | Manufactured | No | 280 | Each | 6.0000 | 1 | 1 | ~~B7V938 (x1) M 11/11/07~~ |

| Location | | Loc Qty | Loc Code | |
|---|---|---|---|---|
| FP | | 6 | | |
| | 70878 | 6 | | |

| | | | | | | | | |
|---|---|---|---|---|---|---|---|---|
| AN960JD10L NAS1149D0332J<br>Washer | Purchased | No | 280 | Each | 0.0000 | 2 | 2 | M 117087 (x2) M 11/11/07 |
| AN3-37A<br>Bolt | Purchased | No | 280 | Each | 261.0000 | 7 | 7 | M 11/11/07 |

| Location | | Loc Qty | Loc Code | |
|---|---|---|---|---|
| ST353 | | 211 | | |
| | 111668 | 111 | | |
| | 118628 | 100 | | |
| ST354 | | 50 | | |
| | 117619 | 50 | | X 7 |

Dart Aerospace Ltd

| W/O: | | WORK ORDER CHANGES | | | | | |
|---|---|---|---|---|---|---|---|
| DATE | STEP | PROCEDURE CHANGE | By | Date | Qty | Approval Chief Eng / Prod Mgr | Approval QC Inspector |
| | | | | | | | |
| | | | | | | | |

**Part No:** _____ **PAR #:** _____ **Fault Category:** _____ **NCR:** Yes No **DQA:** _____ **Date:** _____

**Resolution:** _____ **Disposition:** _____ **QA: N/C Closed:** _____ **Date:** _____

| NCR: | | WORK ORDER NON-CONFORMANCE (NCR) | | | | | | |
|---|---|---|---|---|---|---|---|---|
| DATE | STEP | Description of NC Section A | Corrective Action Section B | | | Verification Section C | Approval Chief Eng | Approval QC Inspector |
| | | | Initial Chief Eng | Action Description Chief Eng | Sign & Date | | | |
| | | | | | | | | |
| | | | | | | | | |
| | | | | | | | | |

**NOTE:** Date & initial all entries

# Picklist Print

*Tuesday, September 27, 2011 12:25:58 PM*

**Work Order ID:** 74221

**Parent Item:** D206-642-151

**Parent Item Name:** Replacement Skidtube

**Start Date:** 10/3/2011 **Required Date:** 11/4/2011

**Start Qty:** 1.00 **Required Qty:** 1.00

| | | | | | | | | |
|---|---|---|---|---|---|---|---|---|
| NAS1149D0363J | Purchased | No | 280 | Each | 4,404.000 | 7 | 7 | |
| Washer | | | | | | | | |

| Location | Loc Qty | Loc Code | |
|---|---|---|---|
| ST298 | 4404 | | |
| 117601 | 274 | | |
| 118077 | 1130 | | |
| 118612 | 1000 | | X7 |
| 118968 | 2000 | | |

Dart Aerospace Ltd

| W/O: | | WORK ORDER CHANGES | | | | | |
|---|---|---|---|---|---|---|---|
| DATE | STEP | PROCEDURE CHANGE | By | Date | Qty | Approval Chief Eng / Prod Mgr | Approval QC Inspector |
| | | | | | | | |
| | | | | | | | |

**Part No:** _____ **PAR #:** _____ **Fault Category:** _____ **NCR:** Yes No **DQA:** _____ **Date:** _____

**Resolution:** _____ **Disposition:** _____ **QA: N/C Closed:** _____ **Date:** _____

| NCR: | | WORK ORDER NON-CONFORMANCE (NCR) | | | | | | |
|---|---|---|---|---|---|---|---|---|
| DATE | STEP | Description of NC Section A | Corrective Action Section B | | | Verification Section C | Approval Chief Eng | Approval QC Inspector |
| | | | Initial Chief Eng | Action Description Chief Eng | Sign & Date | | | |
| | | | | | | | | |
| | | | | | | | | |
| | | | | | | | | |

**NOTE:** Date & initial all entries

| ITEM | Qty -041 | Qty -043 | Part Number | Description |
|---|---|---|---|---|
| 1 | X | | D3804-041 | SKIDTUBE ASSEMBLY, 206 A/B LOW |
| 2 | | X | D3804-043 | SKIDTUBE ASSEMBLY, 206 A/B HIGH |
| | | | | |
| 5 | 1 | 1 | D2600-1-160 | EXTRUSION |
| 6 | 1 | 1 | D2646 | AFT CAP |
| 7 | 1 | 1 | D2647 | CAP |
| 8 | 19 | 20 | D2649 | CROSS BOLT SPACER |
| 9 | 6 | 8 | D2651-1 | PLUG |
| 10 | 6 | 8 | D2651-3 | O-RING |
| 11 | | 1 | D2654-3 | WEB |
| 12 | 1 | | D2654-1 | WEB |
| 13 | 1 | 1 | D2680-041 | NUT PLATE |
| 14 | 2 | 2 | D3286-1 | DOUBLER |
| 15 | 2 | 2 | D3286-3 | STUD |
| | | | | |
| 21 | 2 | 2 | AN960JD10L | WASHER |
| 22 | 1 | 1 | AN960JD416 | WASHER |
| 23 | 2 | 2 | CCR264SS3-3 | RIVET |
| 24 | 2 | 2 | CR3212-4-03 | RIVET |
| 25 | 52 | 52 | CR3212-4-04 | RIVET |
| 26 | 2 | 2 | MS27039-1-08 | SCREW |
| 27 | 1 | 1 | MS27039-4-06 | SCREW |

**NOTES**

1) MATERIAL: N/A
2) FINISH: -CHEMICAL CONVERSION COAT PER DART QSI 005 4.1
   -POWDER COAT WHITE (4.3.5.1) PER DART QSI 005 4.3
3) BLACK ANTI-SKID PAINT AS INDICATED TO 0.5 ABOVE LOCATION RIDGE PER DART QSI 005 4.4
4) TOLERANCES ARE PER DART QSI 018 UNLESS OTHERWISE NOTED
5) UNITS: INCHES UNLESS OTHERWISE NOTED
6) BREAK SHARP EDGES: 0.005 TO 0.010 MAX
7) IDENTIFICATION: NONE
8) WEIGHT: 12.5 lb
9) WELD PER DART QSI 004
10) BENDING: DAMAGE TOLERANCE ON FWD BEND:
    THERE SHOULD BE NO VISIBLE WRINKLES IN THE BEND FROM THE GROUND TO A HEIGHT OF 5 INCHES ABOVE THE GROUND. IT IS ACCEPTABLE TO POLISH OUT GOUGES UP TO 0.020 DEEP IN THE BENT PORTION OF THE TUBE. A MAXIMUM REDUCTION IN DIAMETER OF 0.150" IS ACCEPTABLE IN THE BENT PORTION OF THE TUBE.
11) BOND WEB INTO OUTER TUBE WITH SIKAFLEX-241/-291 ADHESIVE PER DART QSI 015
12) INSERT D2651-1 PLUG C/W D2651-3 O-RING IN HOLES MARKED 'P' (BOTH SIDES OF TUBE)

# 74281

RELEASED
UP 09.03.09
per ECN 09-536

| REV. | DESCRIPTION | BY | DATE |
|---|---|---|---|
| A | NEW ISSUE | MB | 08.07.07 |

| | | | |
|---|---|---|---|
| DESIGN | | DART AEROSPACE USA, INC<br>PORT HADLOCK, WA | |
| DRAWN | | | |
| CHECKED | | DRAWING NO. | REV. A |
| MFG. APPR. | | D3804 | SHEET 1 OF 5 |
| APPROVED | | TITLE | SCALE |
| DE APPR. | | SKIDTUBE ASSEMBLY, 206A/B | NTS |
| DATE | 08.07.07 | | |

COPYRIGHT © 2008 BY DART AEROSPACE USA, INC
THIS DOCUMENT IS PRIVATE AND CONFIDENTIAL AND IS SUPPLIED ON THE EXPRESS CONDITION THAT IT IS NOT TO BE USED FOR ANY PURPOSE OR COPIED OR COMMUNICATED TO ANY OTHER PERSON WITHOUT WRITTEN PERMISSION FROM DART AEROSPACE USA, INC.

Dart Aerospace Ltd

| W/O: | | WORK ORDER CHANGES | | | | | |
|---|---|---|---|---|---|---|---|
| DATE | STEP | PROCEDURE CHANGE | By | Date | Qty | Approval Chief Eng / Prod Mgr | Approval QC Inspector |
| | | | | | | | |
| | | | | | | | |

**Part No:** _____ **PAR #:** _____ **Fault Category:** _____ **NCR:** Yes No **DQA:** _____ **Date:** _____

**Resolution:** _____ **Disposition:** _____ **QA: N/C Closed:** _____ **Date:** _____

| NCR: | | WORK ORDER NON-CONFORMANCE (NCR) | | | | | | |
|---|---|---|---|---|---|---|---|---|
| DATE | STEP | Description of NC Section A | Corrective Action Section B | | | Verification Section C | Approval Chief Eng | Approval QC Inspector |
| | | | Initial Chief Eng | Action Description Chief Eng | Sign & Date | | | |
| | | | | | | | | |
| | | | | | | | | |
| | | | | | | | | |

**NOTE:** Date & initial all entries

H:\fFORMS\Quality Assurance\approved QA\NCRWO RevE

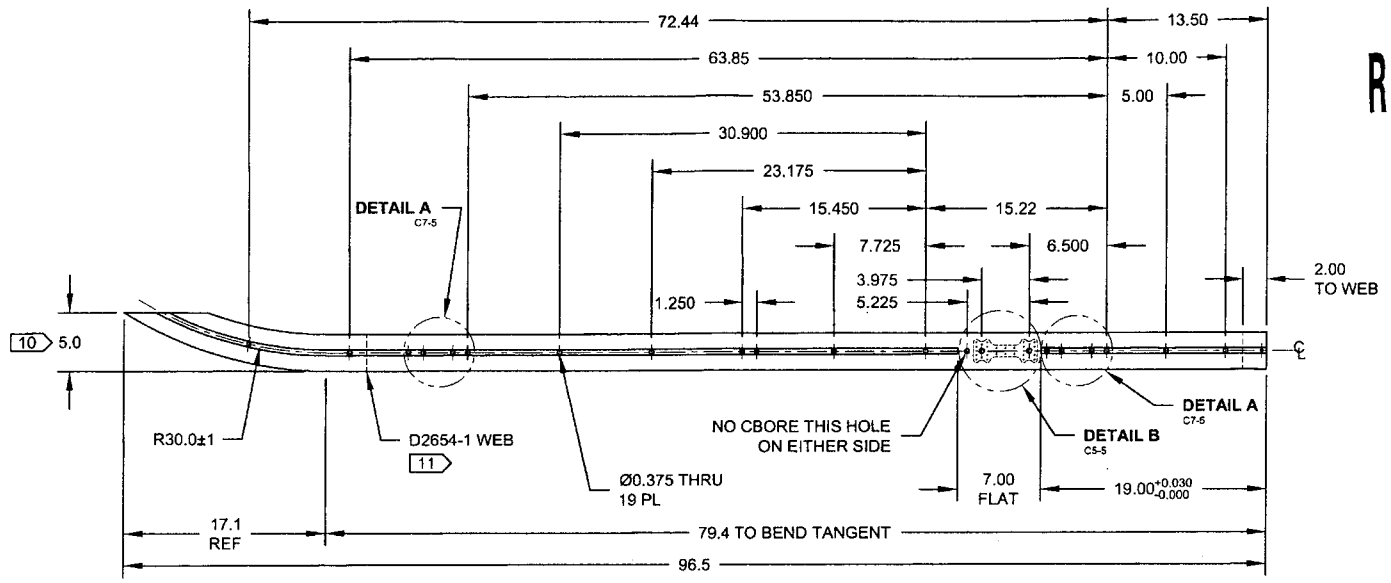


**D3804-041 BENDING/DRILLING DETAIL**

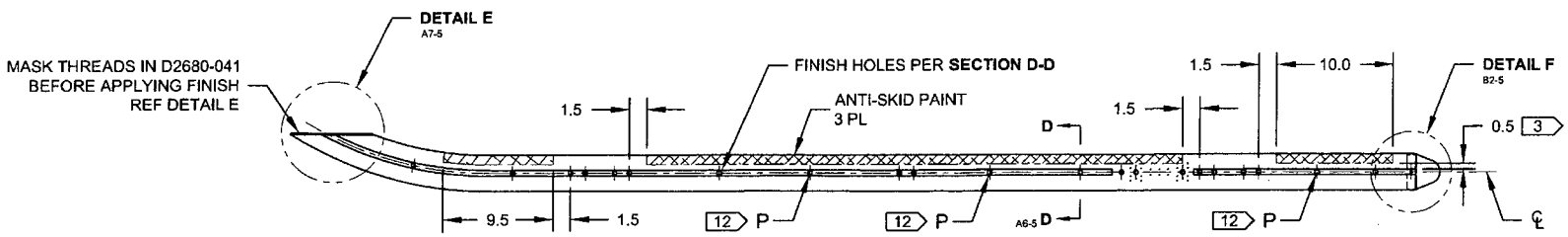


**D3804-041 ASSEMBLY/FINISHING DETAIL**

RELEASED
09.03.03

#74221

| | | |
|---|---|---|
| DESIGN | | DART AEROSPACE USA, INC<br>PORT HADLOCK, WA |
| DRAWN | | |
| CHECKED | | DRAWING NO. D3804 — REV. A — SHEET 2 OF 5 |
| MFG. APPR. | | |
| APPROVED | | TITLE: SKIDTUBE ASSEMBLY, 206A/B — SCALE: NTS |
| DE APPR. | | |
| DATE 08.07.07 | | |

COPYRIGHT © 2008 BY DART AEROSPACE USA, INC
THIS DOCUMENT IS PRIVATE AND CONFIDENTIAL AND IS SUPPLIED ON THE EXPRESS CONDITION THAT IT IS NOT TO BE USED FOR ANY PURPOSE OR COPIED OR COMMUNICATED TO ANY OTHER PERSON WITHOUT WRITTEN PERMISSION FROM DART AEROSPACE USA, INC.

Dart Aerospace Ltd

| W/O: | | WORK ORDER CHANGES | | | | | |
|---|---|---|---|---|---|---|---|
| DATE | STEP | PROCEDURE CHANGE | By | Date | Qty | Approval Chief Eng / Prod Mgr | Approval QC Inspector |
| | | | | | | | |
| | | | | | | | |

**Part No:** _____ **PAR #:** _____ **Fault Category:** _____ **NCR:** Yes No **DQA:** _____ **Date:** _____

**Resolution:** _____ **Disposition:** _____ **QA: N/C Closed:** _____ **Date:** _____

| NCR: | | WORK ORDER NON-CONFORMANCE (NCR) | | | | | | |
|---|---|---|---|---|---|---|---|---|
| DATE | STEP | Description of NC Section A | Corrective Action Section B | | | Verification Section C | Approval Chief Eng | Approval QC Inspector |
| | | | Initial Chief Eng | Action Description Chief Eng | Sign & Date | | | |
| | | | | | | | | |
| | | | | | | | | |
| | | | | | | | | |

**NOTE:** Date & initial all entries

H:\fFORMS\Quality Assurance\approved QA\NCRWO RevE

RELEASED 09.03.07

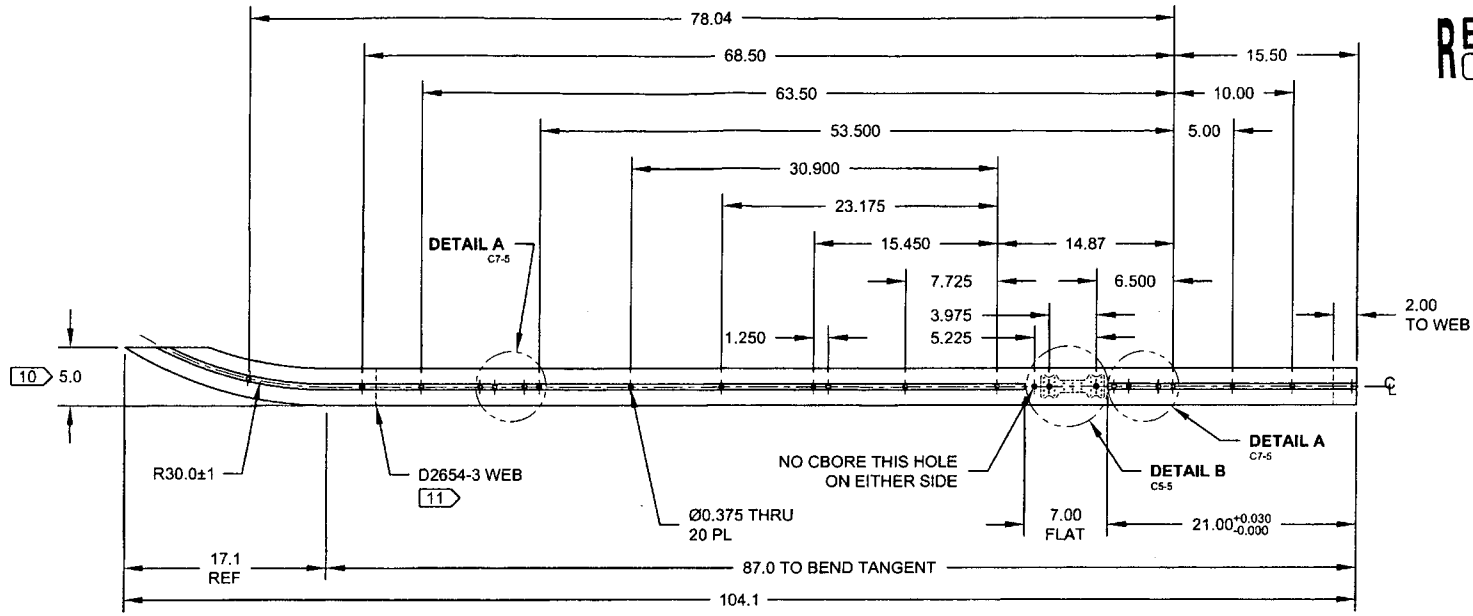


#74221

**D3804-043 BENDING/DRILLING DETAIL**

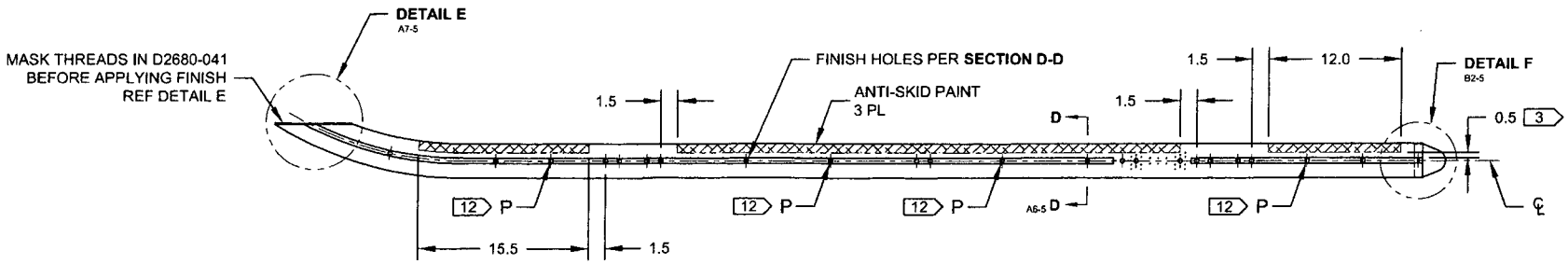


**D3804-043 ASSEMBLY/FINISHING DETAIL**

| | | | |
|---|---|---|---|
| DESIGN | | DART AEROSPACE USA, INC<br>PORT HADLOCK, WA | |
| DRAWN | | | |
| CHECKED | | DRAWING NO. | REV. A |
| MFG. APPR. | | D3804 | SHEET 3 OF 5 |
| APPROVED | | TITLE | SCALE |
| DE APPR. | | SKIDTUBE ASSEMBLY, 206A/B | NTS |
| DATE | 08.07.07 | | |

COPYRIGHT © 2008 BY DART AEROSPACE USA, INC
THIS DOCUMENT IS PRIVATE AND CONFIDENTIAL AND IS SUPPLIED ON THE EXPRESS CONDITION THAT IT IS NOT TO BE USED FOR ANY PURPOSE OR COPIED OR COMMUNICATED TO ANY OTHER PERSON WITHOUT WRITTEN PERMISSION FROM DART AEROSPACE USA, INC.

Dart Aerospace Ltd

| W/O: | | WORK ORDER CHANGES | | | | | |
|---|---|---|---|---|---|---|---|
| DATE | STEP | PROCEDURE CHANGE | By | Date | Qty | Approval Chief Eng / Prod Mgr | Approval QC Inspector |
| | | | | | | | |
| | | | | | | | |

**Part No:** _____ **PAR #:** _____ **Fault Category:** _____ **NCR:** Yes No **DQA:** _____ **Date:** _____

**Resolution:** _____ **Disposition:** _____ **QA: N/C Closed:** _____ **Date:** _____

| NCR: | | WORK ORDER NON-CONFORMANCE (NCR) | | | | | | |
|---|---|---|---|---|---|---|---|---|
| DATE | STEP | Description of NC Section A | Corrective Action Section B | | | Verification Section C | Approval Chief Eng | Approval QC Inspector |
| | | | Initial Chief Eng | Action Description Chief Eng | Sign & Date | | | |
| | | | | | | | | |
| | | | | | | | | |
| | | | | | | | | |

**NOTE:** Date & initial all entries

H:\fFORMS\Quality Assurance\approved QA\NCRWO RevE

RELEASED
09.0303

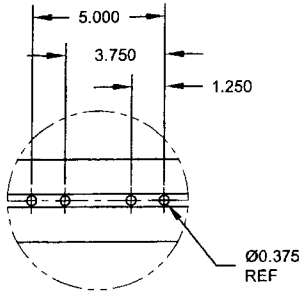


**DETAIL A** D6-2 C2-2 D6-3 C2-3
SCALE NONE

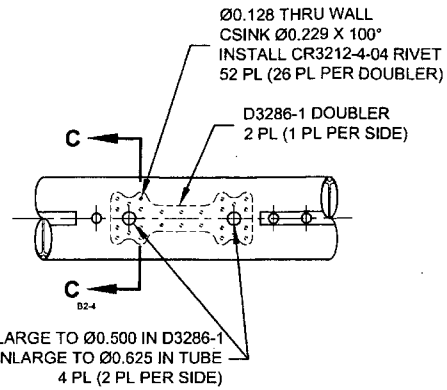


**DETAIL B** C3-2 C3-3
SCALE NONE

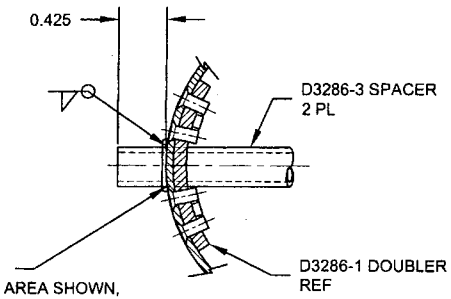


TO INSTALL D3286-1/-3:
1. GRIND OFF FLANGE IN AREA SHOWN, FLUSH WITH OUTSIDE SURFACE OF ROUND TUBE
2. LOCATE & DRILL D3286-1 DOUBLER USING DT3286-1T1
3. ENLARGE HOLES IN D3286-1 TO Ø0.500
4. ENLARGE HOLES IN TUBE TO Ø0.625 AND CHAMFER HOLE 0.03 X 45°
5. RIVET D3286-1 TO TUBE
6. INSERT D3286-3 SPACER
7. WELD IN PLACE AND GRIND FLUSH

#74221

**SECTION C-C** C6-4
PARTIAL SECTION
SCALE NONE

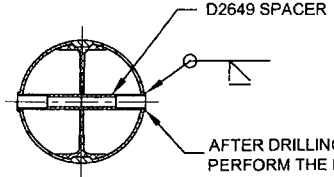


AFTER DRILLING AND BENDING ASSEMBLY PERFORM THE FOLLOWING FOR Ø0.375 HOLES ONLY:
1. CHAMFER HOLE 0.03 X 45°
2. INSERT D2649 SPACER
3. WELD INTO PLACE AND GRIND FLUSH
4. CBORE TO Ø0.313 X 0.75 DP (EXCEPT WHERE INDICATED)

**SECTION D-D** A4-2 A4-3
FOR Ø0.375 HOLES ONLY
SCALE NONE

| | | | |
|---|---|---|---|
| DESIGN | | DART AEROSPACE USA, INC<br>PORT HADLOCK, WA | |
| DRAWN | | | |
| CHECKED | | DRAWING NO. | REV. A |
| MFG. APPR. | | D3804 | SHEET 4 OF 5 |
| APPROVED | | TITLE | SCALE |
| DE APPR. | | SKIDTUBE ASSEMBLY, 206A/B | NTS |
| DATE | 08.07.07 | | |

COPYRIGHT © 2006 BY DART AEROSPACE USA, INC
THIS DOCUMENT IS PRIVATE AND CONFIDENTIAL AND IS SUPPLIED ON THE EXPRESS CONDITION THAT IT IS NOT TO BE USED FOR ANY PURPOSE OR COPIED OR COMMUNICATED TO ANY OTHER PERSON WITHOUT WRITTEN PERMISSION FROM DART AEROSPACE USA, INC.

Dart Aerospace Ltd

| W/O: | | WORK ORDER CHANGES | | | | | |
|---|---|---|---|---|---|---|---|
| DATE | STEP | PROCEDURE CHANGE | By | Date | Qty | Approval Chief Eng / Prod Mgr | Approval QC Inspector |
| | | | | | | | |
| | | | | | | | |

**Part No:** _____ **PAR #:** _____ **Fault Category:** _____ **NCR:** Yes No **DQA:** _____ **Date:** _____

**Resolution:** _____ **Disposition:** _____ **QA: N/C Closed:** _____ **Date:** _____

| NCR: | | WORK ORDER NON-CONFORMANCE (NCR) | | | | | | |
|---|---|---|---|---|---|---|---|---|
| DATE | STEP | Description of NC Section A | Corrective Action Section B | | | Verification Section C | Approval Chief Eng | Approval QC Inspector |
| | | | Initial Chief Eng | Action Description Chief Eng | Sign & Date | | | |
| | | | | | | | | |
| | | | | | | | | |
| | | | | | | | | |

**NOTE:** Date & initial all entries

RELEASED 09.03.07

#74281

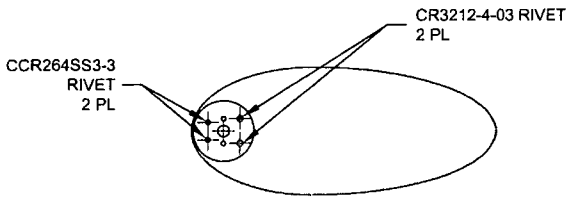


**VIEW G-G** A7-5
SCALE NONE

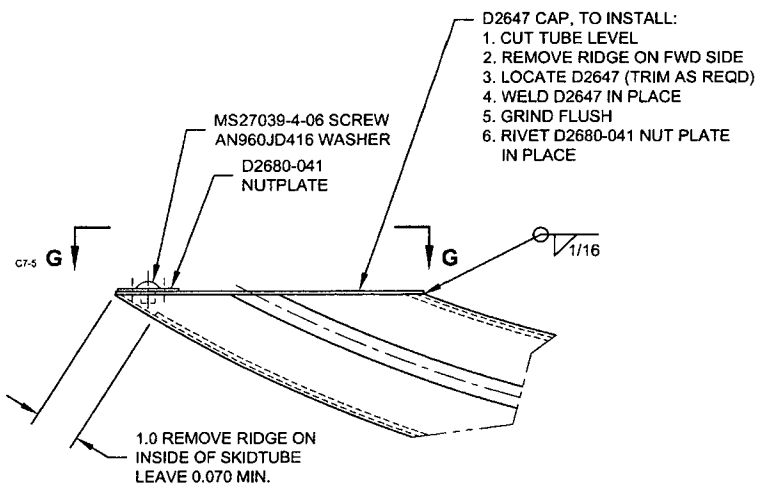


**DETAIL E** B7-2 B7-3
SCALE NONE

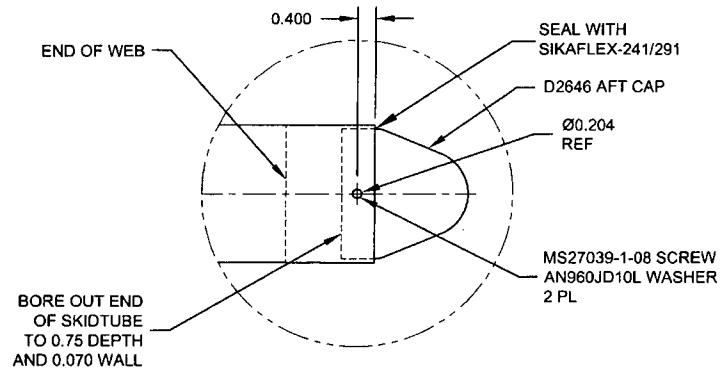


**DETAIL F** B2-2 B2-3
SCALE NONE

| | | | |
|---|---|---|---|
| DESIGN | | **DART AEROSPACE USA, INC** PORT HADLOCK, WA | |
| DRAWN | | | |
| CHECKED | | DRAWING NO. | REV. A |
| MFG. APPR. | | D3804 | SHEET 5 OF 5 |
| APPROVED | | TITLE | SCALE |
| DE APPR. | | SKIDTUBE ASSEMBLY, 206A/B | NTS |
| DATE | 08.07.07 | | |

COPYRIGHT © 2008 BY DART AEROSPACE USA, INC
THIS DOCUMENT IS PRIVATE AND CONFIDENTIAL AND IS SUPPLIED ON THE EXPRESS CONDITION THAT IT IS NOT TO BE USED FOR ANY PURPOSE OR COPIED OR COMMUNICATED TO ANY OTHER PERSON WITHOUT WRITTEN PERMISSION FROM DART AEROSPACE USA, INC.

Dart Aerospace Ltd

| W/O: | | WORK ORDER CHANGES | | | | | |
|---|---|---|---|---|---|---|---|
| DATE | STEP | PROCEDURE CHANGE | By | Date | Qty | Approval Chief Eng / Prod Mgr | Approval QC Inspector |
| | | | | | | | |
| | | | | | | | |

**Part No:** _____ **PAR #:** _____ **Fault Category:** _____ **NCR:** Yes No **DQA:** _____ **Date:** _____

**Resolution:** _____ **Disposition:** _____ **QA: N/C Closed:** _____ **Date:** _____

| NCR: | | WORK ORDER NON-CONFORMANCE (NCR) | | | | | | |
|---|---|---|---|---|---|---|---|---|
| DATE | STEP | Description of NC Section A | Corrective Action Section B | | | Verification Section C | Approval Chief Eng | Approval QC Inspector |
| | | | Initial Chief Eng | Action Description Chief Eng | Sign & Date | | | |
| | | | | | | | | |
| | | | | | | | | |
| | | | | | | | | |

**NOTE:** Date & initial all entries